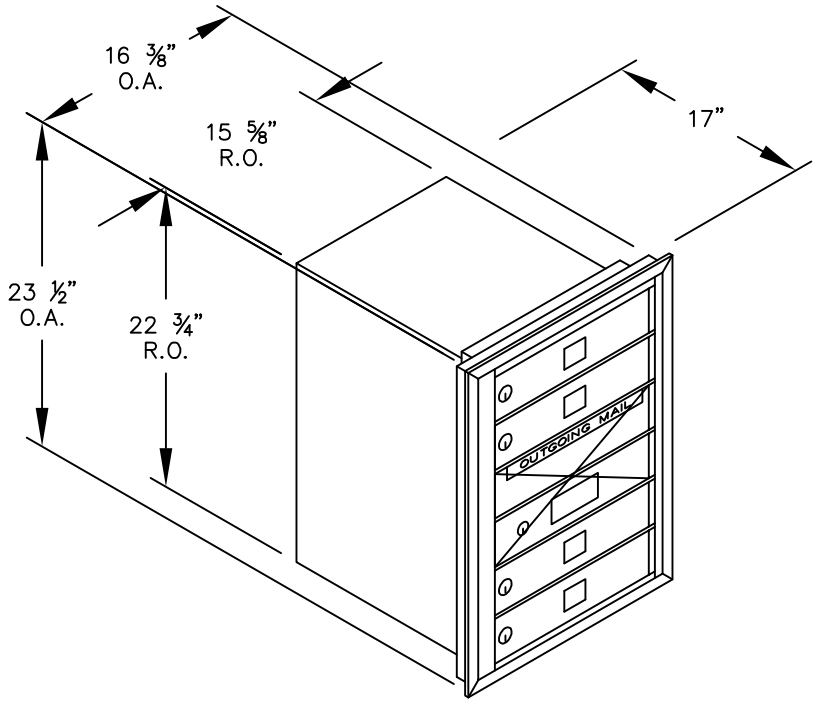

(1) 3706S–04 – FRONT LOADING

(4) 'MB1' DOORS
(1) 'OM2' OUTGOING MAIL COMPARTMENT

MODEL #3706S–04

4C HORIZONTAL MAILBOXES–FRONT LOADING

AVAILABLE COLORS:
ALUMINUM, BRONZE, GOLD OR SANDSTONE

AVAILABLE FOR:
USPS ACCESS OR PRIVATE ACCESS

DRAWN: 11/12

Established in 1936, Salsbury Industries is the industry leader in manufacturing and distributing quality mailboxes.